HS-1100A-N Technical Data Sheet

Pitch: 15.2mm
Minimum Width:152mm
Open Area: 3%
Approved: FDA
Rod: Ø 4.5mm
Flight: No
Side Guard: No
Curve: No

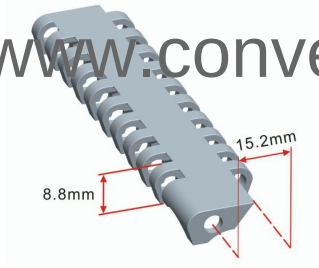

www.conveyorguide.co.th

Data

Belt Material	Belt Strength			Temperature		Belt Weight
	Straight		Curve	℃ (min.)	℃ (max.)	(Kg/M²)
	Kg/M(BW)	N/M(BW)				
Polypropylene	1545	15450	--	1	100	5.2
Polyethylene	1470	14700	--	-60	60	6.0
Acetal	1650	16500	--	-40	80	7.5
Nylon	1565	15650	--	1	180	7.0

BW – Belt Width

Color Table

Polypropylene					Polyethylene					Acetal					Nylon				
W	G	N	DB	B	W	G	N	DB	B	W	G	N	DB	B	W	G	N	DB	B
●	●						●			●						●			

W-White, **G**-Gray, **N**-Nature, **DB**-Dark brown, **B**-Blue

Friction Table

Belt Material	Friction Wear strips & Products							
	UHMW	HDPE	Steel	Glass	SUS	Plastic	Cardboard	Aluminum
Polyethylene	0.32	0.24	0.15	0.09	0.13	0.08	0.15	0.25
Polypropylene	0.13	0.11	0.26	0.19	0.31	0.16	0.21	0.41
Acetal	0.11	0.09	0.27	0.16	0.26	0.15	0.19	0.28
Nylon	0.18	0.13	0.25	0.16	0.26	0.16	0.19	0.27

SUS – Stainless Steel

Equivalent type with other Brand

Brand Name	Intralox	UNI	Rexnord	MCC	Habasit	KVP
Series & Type	1000		1500			
	1100					

The above content is only for reference.

www.conveyorguide.co.th

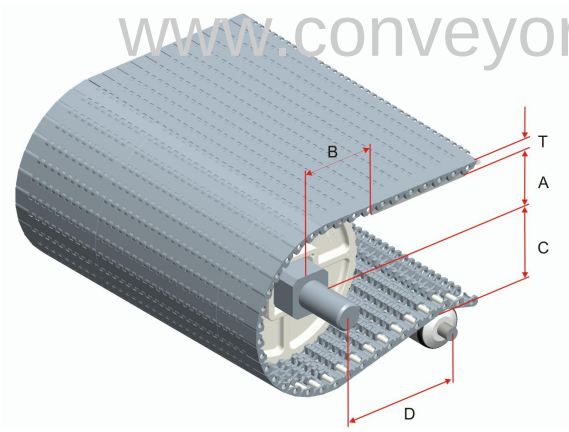

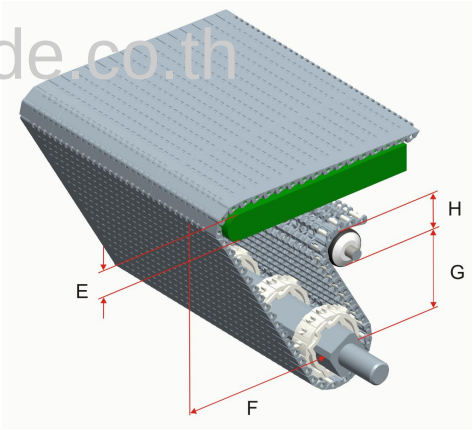

Conveyor Frame Dimensions — Unit : mm

No. Teeth	A (Min.)	B (Min.)	C (Max.)	D (Min.)	E (Min.)	H(Min.)	G(Min.)	F(Min.)	T
16	36	38	40	150	Ø 25	Ø 60	100	50	8.8
24	56	49	60	150	Ø 25	Ø 60	120	80	
32	73	57	80	200	Ø 25	Ø 60	135	130	

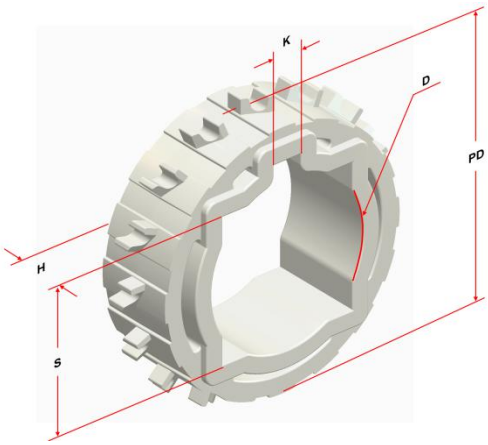

Sprocket Dimensions — Unit: mm

No. Teeth	PD	S	D	H	K
12	58.5	25.5	--	22.5	--
16	78	38.5/40.5	30.5/45.5	25	8X8
24	116	38.5/40.5	48.5	40	8X8
32	155	38.5/40.5	--	40	--